SUBLIMATION LANYARD 10mm RPET
K1

Colour space: CMYK
Dimensions: 10 x 900 mm (±2%)
Care Label: No

BLEED
SAFE AREA
CUT LINES

PLEASE CHECK:

COLOURS
Colours on fabric will closely match **CMYK** or **Pantone**. To ensure accuracy, order a colour sample.
Complaints are considered only if a sample was requested.

DESIGN
Please save format as: **.pdf, .eps, .ai**
Minimum resolution: **300 DPI**

FONTS AND LINES
Fonts must be in curves. Recommended minimum size of text is **6 pt (Arial)**.
Recommended minimum line thickness is **0,2 mm**

PRINT AREA
Artwork outside the safe area may be cut or stitched over.
Placement tolerance is **±2 mm** in height and additional **±5 mm** in width on fitted; size may vary up to **2%**.

FITTED
The distances between the logos are ALWAYS the same on the back and front.
The standard product does not include fitted logos between the inside and outside.
Fitting logos is an extra cost and must be requested during inquiry or order.

Print visualization, fold along red line, check whether the project meets your expectations! Graphics contains small elements, print visualization on a scale of 1:1 to check readablity!

Placing the order or accepting this project means that you are familiar with presented technical information, and you agree with it.

RPET
Approximate appearance of recycled tape.

MAX LOGO HEIGHT - 6mm

YOUR LOGO HEIGHT - xxmm

WHITE COLOR MAY BE BLURRED

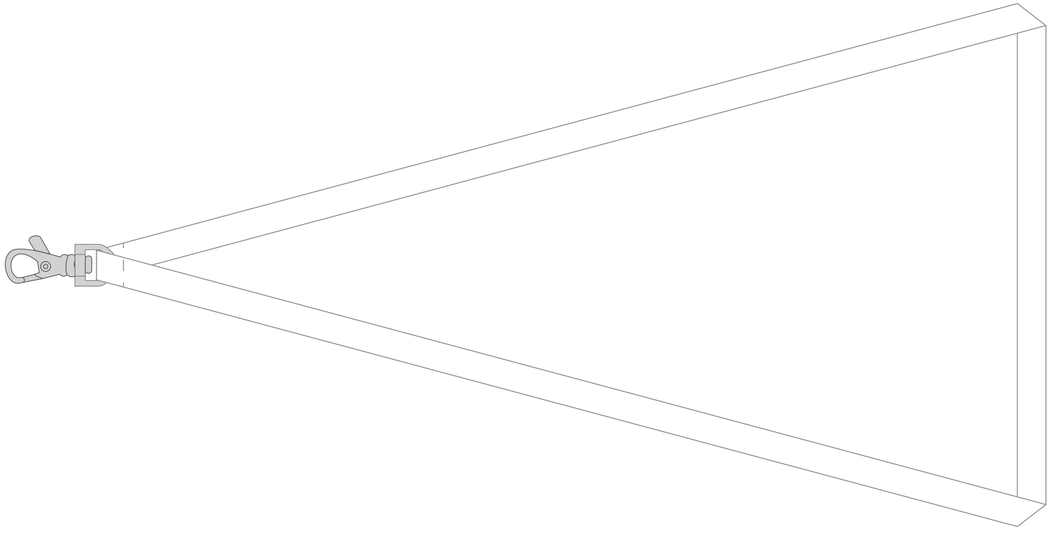

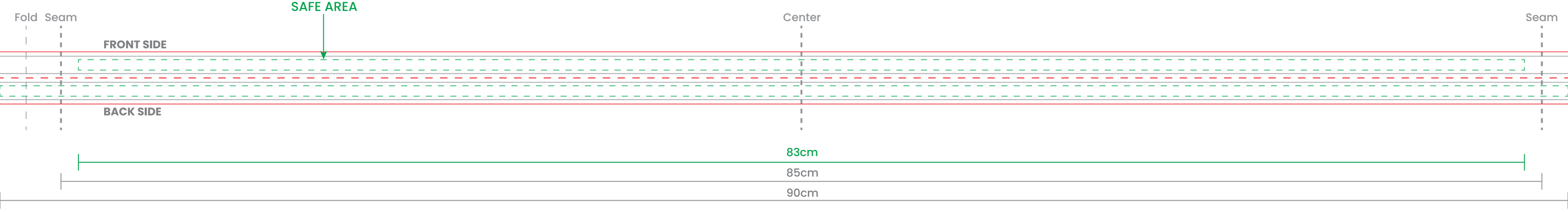

SUBLIMATION LANYARD 15mm RPET
K1

Colour space: CMYK
Dimensions: 15 x 900 mm (±2%)
Care Label: No

BLEED
SAFE AREA
CUT LINES

PLEASE CHECK:

COLOURS
Colours on fabric will closely match **CMYK** or **Pantone**. To ensure accuracy, order a colour sample.
Complaints are considered only if a sample was requested.

DESIGN
Please save format as: **.pdf, .eps, .ai**
Minimum resolution: **300 DPI**

FONTS AND LINES
Fonts must be in curves. Recommended minimum size of text is **6 pt (Arial)**.
Recommended minimum line thickness is **0,2 mm**

PRINT AREA
Artwork outside the safe area may be cut or stitched over.
Placement tolerance is **±2 mm** in height and additional **±5 mm** in width on fitted; size may vary up to **2%**.

FITTED
The distances between the logos are ALWAYS the same on the back and front.
The standard product does not include fitted logos between the inside and outside.
Fitting logos is an extra cost and must be requested during inquiry or order.

Print visualization, fold along red line, check whether the project meets your expectations! Graphics contains small elements, print visualization on a scale of 1:1 to check readablity!

Placing the order or accepting this project means that you are familiar with presented technical information, and you agree with it.

RPET
Approximate appearance of recycled tape.

MAX LOGO HEIGHT - 11mm

YOUR LOGO HEIGHT - xxmm

WHITE COLOR MAY BE BLURRED

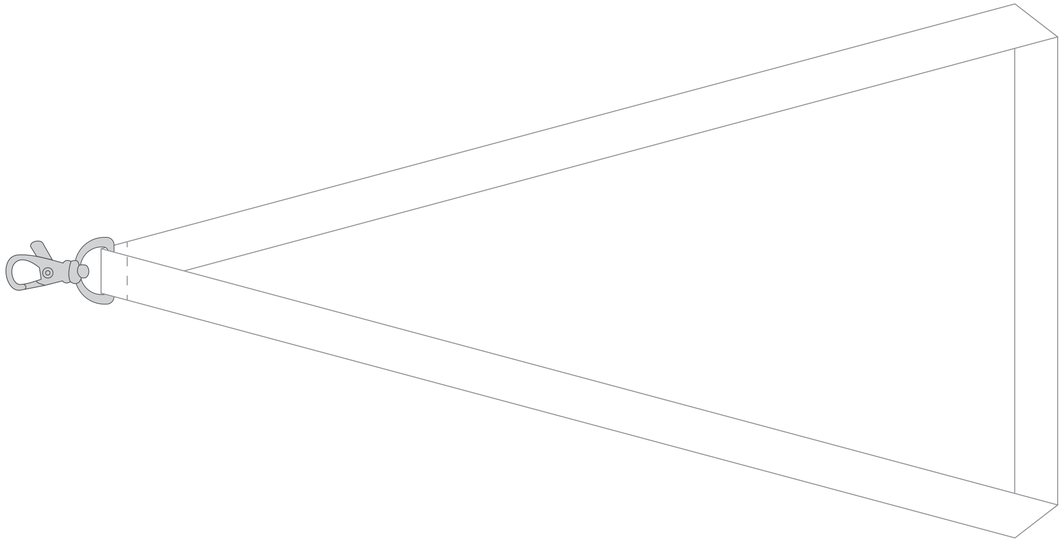

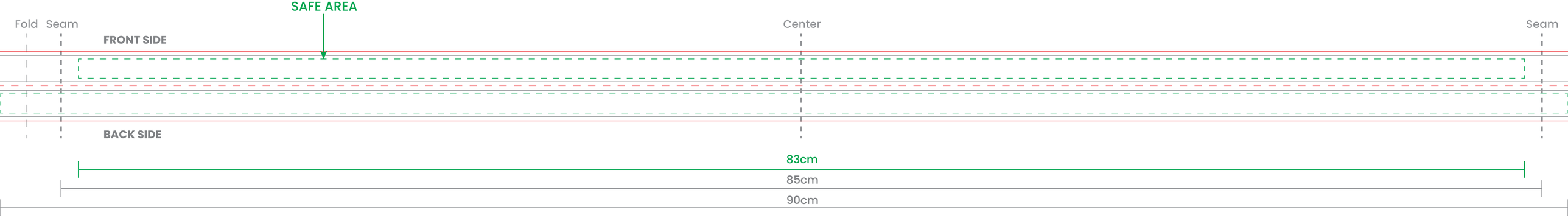

SUBLIMATION LANYARD 20mm RPET
K1

Colour space: CMYK
Dimensions: 20 x 900 mm (±2%)
Care Label: No

BLEED
SAFE AREA
CUT LINES

PLEASE CHECK:

COLOURS
Colours on fabric will closely match **CMYK** or **Pantone**. To ensure accuracy, order a colour sample.
Complaints are considered only if a sample was requested.

DESIGN
Please save format as: **.pdf, .eps, .ai**
Minimum resolution: **300 DPI**

FONTS AND LINES
Fonts must be in curves. Recommended minimum size of text is **6 pt (Arial)**.
Recommended minimum line thickness is **0,2 mm**

PRINT AREA
Artwork outside the safe area may be cut or stitched over.
Placement tolerance is **±2 mm** in height and additional **±5 mm** in width on fitted; size may vary up to **2%**.

FITTED
The distances between the logos are ALWAYS the same on the back and front.
The standard product does not include fitted logos between the inside and outside.
Fitting logos is an extra cost and must be requested during inquiry or order.

Print visualization, fold along red line, check whether the project meets your expectations! Graphics contains small elements, print visualization on a scale of 1:1 to check readablity!

Placing the order or accepting this project means that you are familiar with presented technical information, and you agree with it.

RPET
Approximate appearance of recycled tape.

MAX LOGO HEIGHT - 16mm

YOUR LOGO HEIGHT - xxmm

WHITE COLOR MAY BE BLURRED

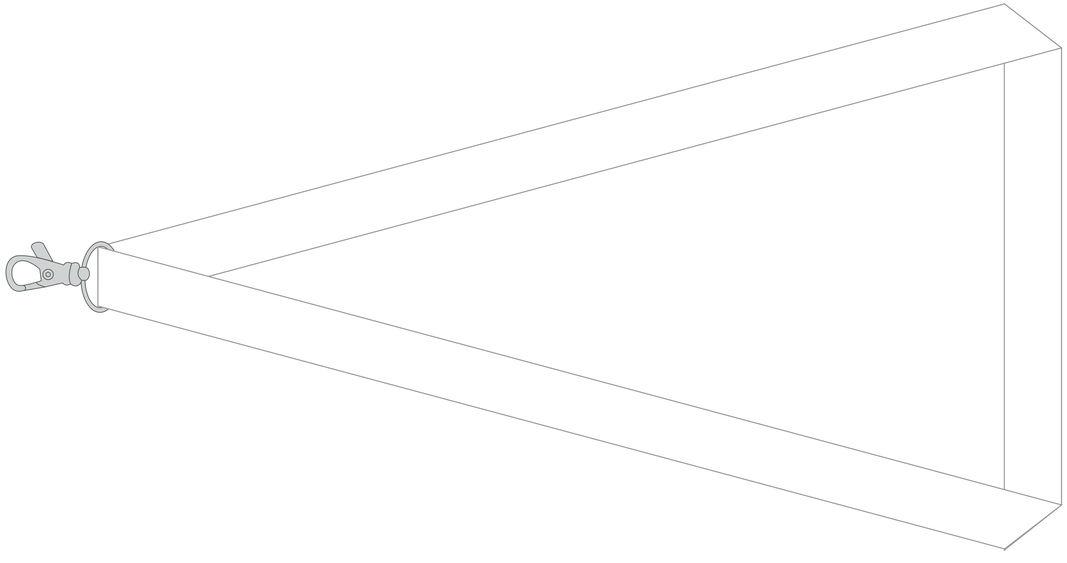

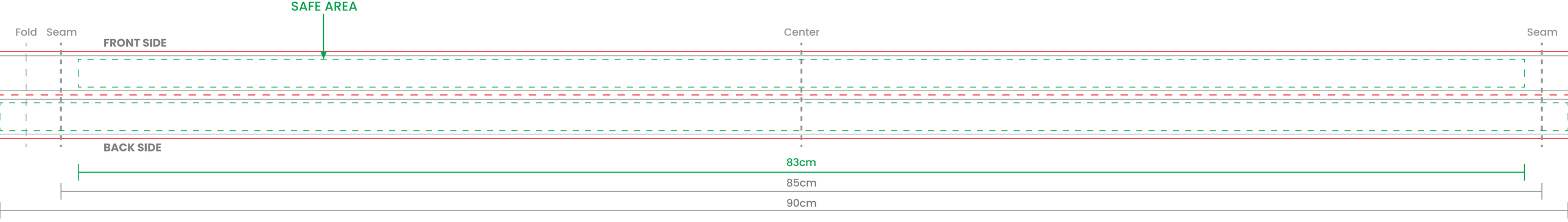

SUBLIMATION LANYARD 25mm RPET
K1

Colour space: CMYK
Dimensions: 25 x 900 mm (±2%)
Care Label: No

BLEED
SAFE AREA
CUT LINES

PLEASE CHECK:

COLOURS
Colours on fabric will closely match **CMYK** or **Pantone**. To ensure accuracy, order a colour sample.
Complaints are considered only if a sample was requested.

DESIGN
Please save format as: **.pdf, .eps, .ai**
Minimum resolution: **300 DPI**

FONTS AND LINES
Fonts must be in curves. Recommended minimum size of text is **6 pt (Arial)**.
Recommended minimum line thickness is **0,2 mm**

PRINT AREA
Artwork outside the safe area may be cut or stitched over.
Placement tolerance is **±2 mm** in height and additional **±5 mm** in width on fitted; size may vary up to **2%**.

FITTED
The distances between the logos are ALWAYS the same on the back and front.
The standard product does not include fitted logos between the inside and outside.
Fitting logos is an extra cost and must be requested during inquiry or order.

Print visualization, fold along red line, check whether the project meets your expectations! Graphics contains small elements, print visualization on a scale of 1:1 to check readablity!

Placing the order or accepting this project means that you are familiar with presented technical information, and you agree with it.

RPET
Approximate appearance of recycled tape.

MAX LOGO HEIGHT - 21mm

YOUR LOGO HEIGHT - xxmm
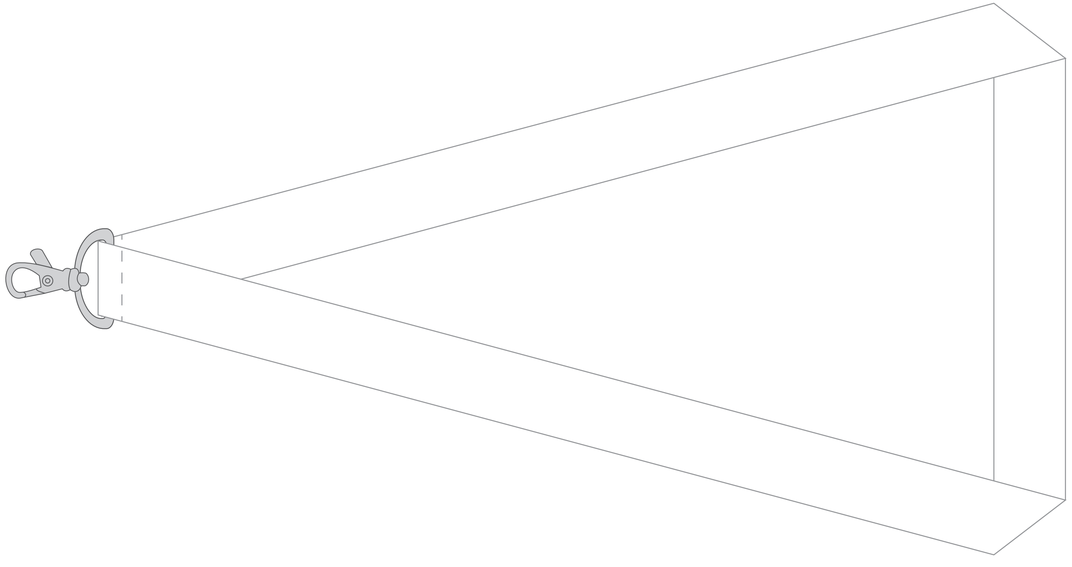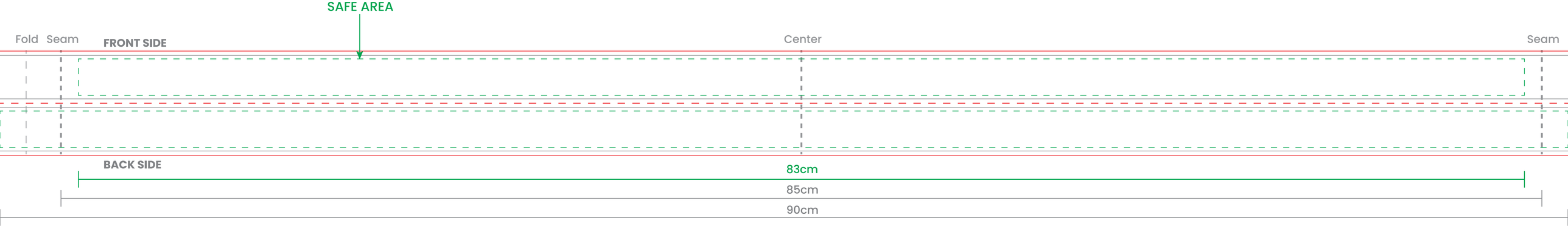
WHITE COLOR MAY BE BLURRED